Borg Warner Model 4479
Cadillac STS
Full Time Transfer Case

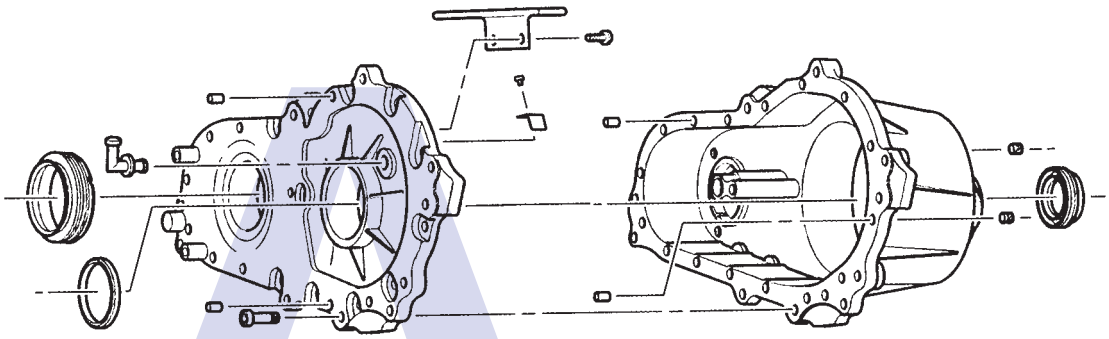

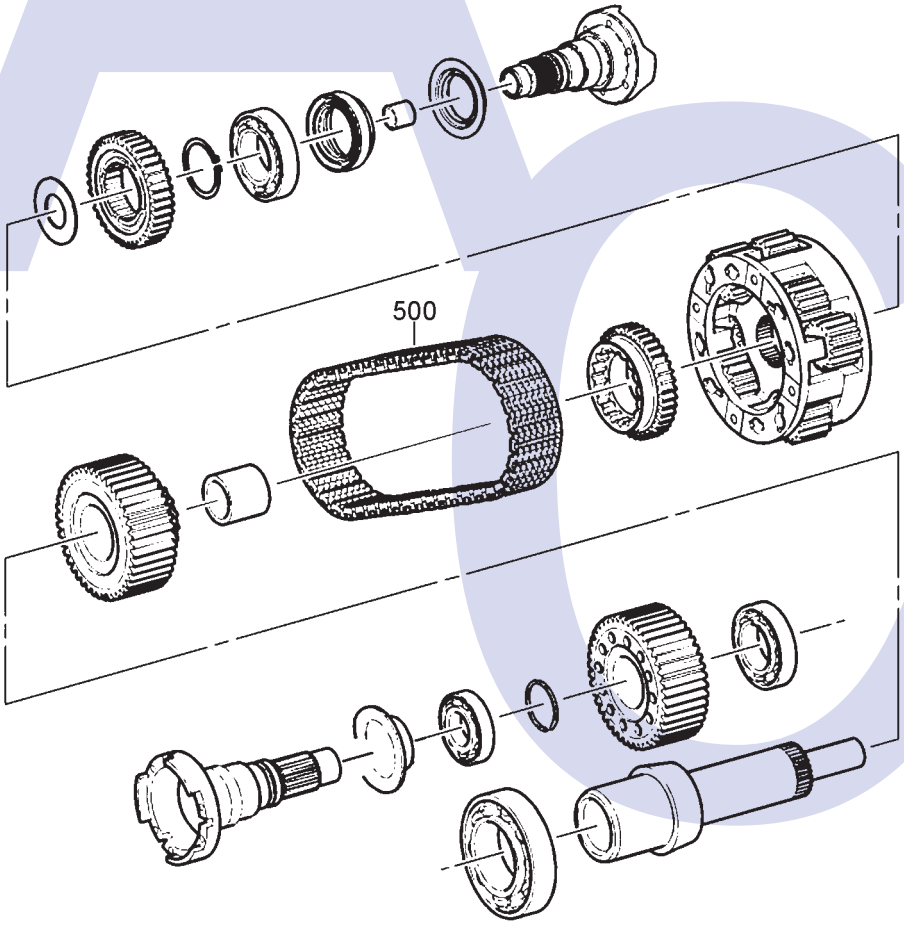

AUTOMATIC CHOICE
THE AUTOMATIC TRANSMISSION PARTS WAREHOUSE

Borg Warner Model 4479

Cadillac STS

Full Time Transfer Case

ILL NO.	DESCRIPTION	YEARS	QTY	PART NO
	MASTER OVERHAUL KITS			
	OVERHAUL GASKET AND SEAL KITS			
	GASKET & RUBBER COMPONENTS			
	METAL CLAD SEALS			
	BUSHINGS, BEARINGS & WASHERS			
	DRIVE CHAINS			
500	Drive Chain (.375" Pitch x 1 1/2" W x 74 Pitches)	All	1	**YBW4476.CH01**
	ELECTRICAL COMPONENTS			
	HARD PARTS			
	MOUNTINGS			
	TRANSFER CASE ASSY'S			
	TOOLS & MANUALS			

ILL NO.	DESCRIPTION	YEARS	QTY	PART NO

AUTOMATIC CHOICE

THE AUTOMATIC TRANSMISSION PARTS WAREHOUSE